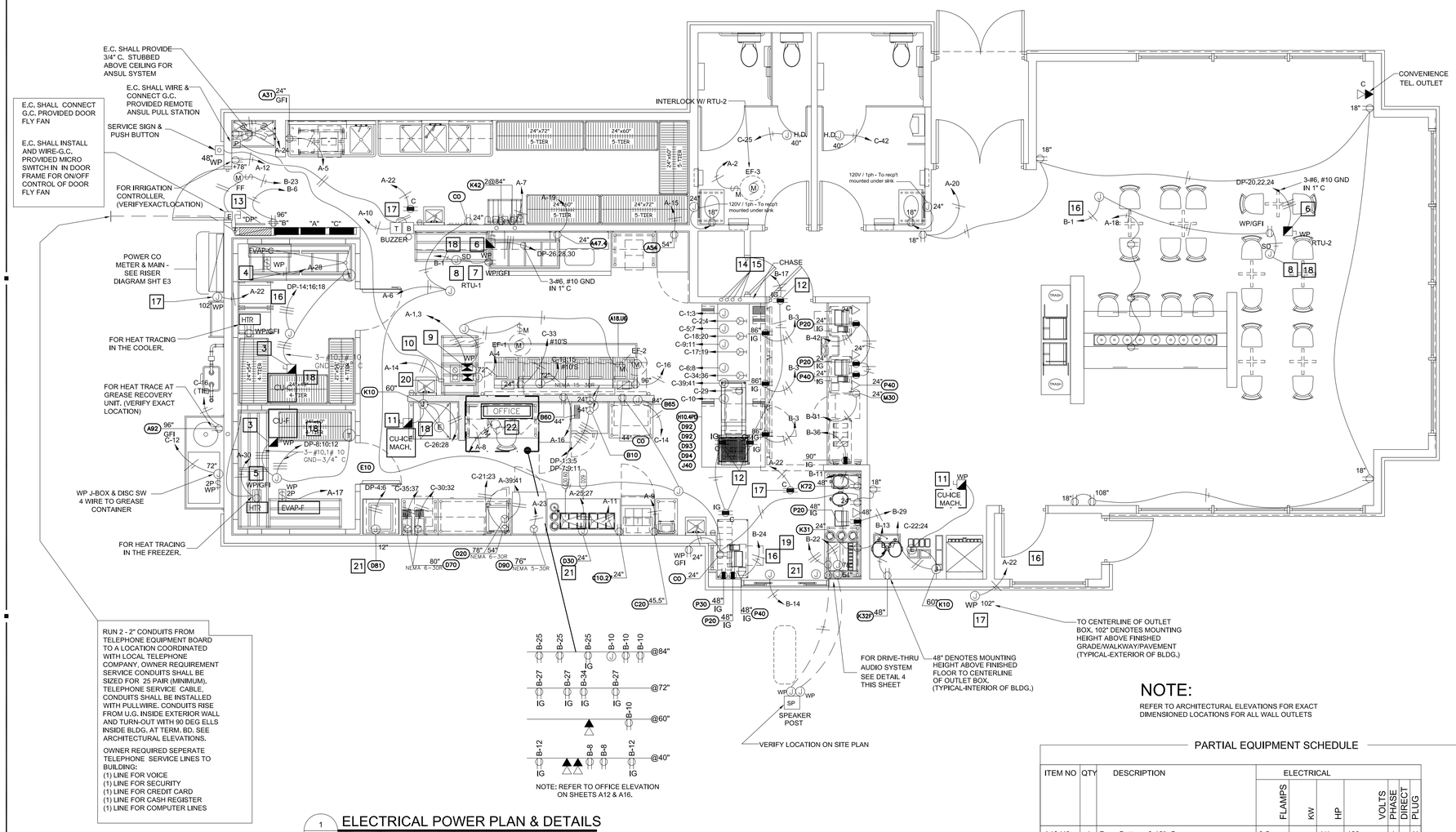

NOTE: REFER TO OFFICE ELEVATION ON SHEETS A12 & A16.

1 E2 ELECTRICAL POWER PLAN & DETAILS

1/4"=1'-0"

POWER PLAN KEY NOTES

1. REFER TO FOOD SERVICE DRAWING K1 FOR TAG LOCATIONS NOT SHOWN THIS SHEET.
2. REFER TO HVAC DRG. M1 FOR EXACT LOCATIONS FOR MECHANICAL HVAC EQUIPMENT.
3. 3P30A NEMA 3R FUSED DISC. ON WALK-IN COND. UNIT LOCATED ON ROOF. FUSE PER EQUIPMENT NAMEPLATE. LIQUID TIGHT FLEX CONNECTION.
4. MAKE FINAL POWER CONNECTION TO WALK-IN COOLER EVAPORATOR. PROVIDE MOTOR SWITCH IN CAST BOX.
5. MAKE FINAL POWER CONNECTION TO WALK-IN FREEZER FREEZER EVAP., DEFROSTER, HEAT TAPE & DOOR HEATER.
6. PROVIDE LOCAL 3P60A NEMA 3R NON-FUSED DISC SW. ON A/C RTU'S LOCATED ON ROOF EQUIP. NAMEPLATE. PROVIDE LIQUID TIGHT FLEX CONN. TO UNIT.
7. PROVIDE GFCI PROTECTED 5-20R DUPLEX RECEPT. INSTALLED IN WP BOX W/ WP COVER AT RTU. (TYP).
8. PROVIDE 120V WIRING TO DUCT MOUNTED SMOKE DETECTORS AND REMOTE TEST/INDICATORS. FOR EXACT LOCATIONS OF DUCT DETECTORS, REMOTE INDICATORS & TEST SW'S. (SEE HVAC PLANS).
9. E.C. SHALL INSTALL AND WIRE RELAY CONTROL PANEL PACKAGE FOR HOOD EXHAUST FANS EF-1 AND EF-2. PROVIDE POWER AND INTERLOCK CONTROL WIRING FOR HP1-F CONTROL PANEL AND HOOD FIRE SUPPRESSION SYSTEM. SEE HOOD FAN CONTROL INTERLOCK WIRING DIAGRAM. SHEET M2. MOUNT STARTERS AND CONTROLS ON WALL.
10. "ON/OFF" SELECTOR SWITCH AND PILOT LIGHT IN NEMA 4X STAINLESS STEEL ENCLOSURE MOUNTED ON THE FACE OF THE HOOD. PROVIDED BY HOOD MFR.
11. PROVIDE 2P30A NEMA 3R FUSED DISC SWITCH & L.T. FLEX CONNECTION TO ROOF MTD ICE MAKER COND UNIT, FUSE SIZE PER MFG'S NAMEPLATE DATA.
12. PROVIDE CEILING OUTLET W/ISOLATED GROUND RECEPTACLES SUPPORTED FROM BLDG. STRUCTURE FOR VIDEO MONITOR/PRINTER & OR HEADSET. VERIFY EXACT REQUIREMENTS & LOCATION.
13. PROVIDE 3/4" x 18" H x 24" W PLYWOOD TELEPHONE BOARD PAINTED WITH 2 COATS OF "LISTED" FIRE RETARDANT LIGHT GRAY COLOR PAINT. AT 96" A.F.F. PROVIDE QUAD RECEPTACLE ADJACENT TO BOARD. PROVIDE # 6 CU. GROUND TO SERVICE ENTRANCE GROUND, SEE DETAIL ARCHITECTURAL ELEVATIONS.
14. PROVIDE CEILING DROPS FOR PRODUCTION COUNTER BRANCH CIRCUITS TO CEILING MOUNTED J-BOXES TO SERVE ALL ELECTRICAL IN CTR.
15. PRODUCTION COUNTER ELECTRICAL POWER CIRCUITS: REFER TO PANEL SCHEDULE "C" FOR CIRCUIT NO'S. REFER TO EQUIPMENT SUPPLIER SHOP DRAWINGS FOR EXACT LOCATIONS AND TYPE OF CONNECTIONS FOR EQUIPMENT AND HEAT LIGHTS IN/OR ON PRODUCTION COUNTER.
16. BRANCH CIRCUIT(S) CONTINUED TO ADDITIONAL OUTLETS. HOMERUN SHOWN FOR CLARITY ONLY.
17. OUTLET AND CONNECTION FOR SECURITY CAMERA. VERIFY EXACT LOCATIONS AND TYPE CONNECTIONS FOR INDOOR AND OUTDOOR CAMERAS WITH G.C..
18. ROUTE ALL CONDUIT ROOF PENETRATIONS THRU (WITH-IN) ROOF CURBS FOR THE EQUIPMENT. REFR TO MECH. PLANS FOR CURB DETAILS. (TYPICAL)
19. PROVIDE 1" CONDUIT TO 6" ABOVE CEILING.
20. HOOD ANSUL FIRE SUPPRESION SYSTEM.
21. MAKE FINAL CONNECTION TO EQUIPMENT
22. OFFICE EXHAUST FAN SHALL BE INTERCONNECTED TO OPERATE WITH AREA LIGHTING. INTERLOCK EXHAUST FAN WITH LIGHTS.

P.O.S. NOTES:

1. ALL P.O.S. (POINT OF SALE) CIRCUITS SHALL HAVE AN ISOLATED GROUND WIRE BACK TO THE PANEL. ALL P.O.S. EQUIP. SHALL BE WIRED INDEPENDENTLY OF ANY NON-P.O.S. EQUIPMENT.
2. ALL RECEPTACLES FOR P.O.S. EQUIPMENT SHALL BE ISOLATED GROUND WITH SURGE SUPPRESSOR TYPE. ALL RECEPTACLES FOR P.O.S. EQUIPMENT SHALL BE SINGLE UNIT, UNLESS A DUPLEX RECEPTACLE CAN BE USED TO SUPPLY TWO P.O.S. UNITS. DUPLEX RECEPTACLES MAY BE USED IN THE MANAGER'S OFFICE FOR NON-P.O.S. EQUIPMENT (COMPUTER, MUSIC, FIRE ALARM, SECURITY, ETC.)
3. ALL CIRCUITS FOR P.O.S. EQUIPMENT SHALL BE CONNECTED TO THE SAME PHASE OF POWER IN THE PANEL. ALL BRANCH CIRCUIT BREAKERS SUPPLYING P.O.S. EQUIPMENT SHALL HAVE LOCKING HANDLES DEVICES.
4. EACH RECEPTACLE TYPE (LOCKING OR STRAIGHT BLADE) SHALL MATCH THAT OF THE EQUIPMENT FURNISHED. WHERE P.O.S. EQUIPMENT IS FURNISHED WITHOUT A PLUG THE RECEPTACLE SHALL BE LOCKING TYPE. COORDINATE RECEPTACLE TYPES WITH THE P.O.S. EQUIPMENT SUPPLIER.

GENERAL NOTES:

A. VERIFY MOUNTING HEIGHTS OF ALL RECEPTACLES WITH EQUIPMENT SUPPLIED PRIOR TO INSTALLATION.

B. ALL EQUIPMENT ELECTRICAL OUTLETS ARE DIMENSIONED TO CENTERLINE OF BOX FROM ABOVE FINISHED FLOOR.

C. ELECTRICAL CONTRACTOR TO PROVIDE CORD & PLUG CONNECTIONS FOR EQUIPMENT AS REQUIRED.

NOTE:

REFER TO ARCHITECTURAL ELEVATIONS FOR EXACT DIMENSIONED LOCATIONS FOR ALL WALL OUTLETS

PARTIAL EQUIPMENT SCHEDULE

ITEM NO	QTY	DESCRIPTION	ELECTRICAL FLAMPS	KW	HP	VOLTS	PHASE	DIRECT	PLUG
A18.U6	1	Fryer Battery, 6-18", Gas	8.5		1/4	120	1		X
A31	1	Marinator - (reduced height)	5.0			115	1		X
A47.4	1	Ice Batter / Sifter Table, 4 Pans, 100"	2.3	.3		115	1		X
A54	1	Freezer, Upright	12.0		1/2	115	1		X
A92	1	Grease Collection System	10.0	1.2		115	1		X
		B - BAKING							
B60	1	Refrigerator, Upright	12.0		1/3	115	1		X
B65	1	Biscuit Holding Unit (Optional)	4.5	1.44		120	1		X
		C - SANDWICH							
C20	1	Toaster, Vertical Contact	13.0	1.5		115	1		X
C30.1	1	Wall Mounted Shelf, Holding Unit, Wrap							
D10.30	1	Work Table, w/ 4" backsplash w/ u/s							
D11.60	1	Work Table, w/ 4" backsplash w/o u/s							
D30	1	Packing Station w/ Cup Disp.& Dipper Well	6.0	1.24		208	1	X	
D40	1	Sink, 3 Compartment, 94" Long, 18" DB R&L							
D70	2	Dispenser, Hot Water, w/ Wall Mount	19.2	4.03		208	1		X
D81	1	Chubb Warmer, Elec Rethermalizer.	47.6	9.5		208	1	X	
D90	1	Holding Cabinet, Reach-In	17.6	2.11		120	1		X
D92	2	Side Items Holding Unit, Pass-Thru	13.87	3.33		208	1		X
		E - WALK-IN							
E10.1	2	Walk-In Cooler Condenser	VERIFY WITH MANF.			208	3	X	
E20.1	1	Walk-In Freezer Condenser	VERIFY WITH MANF.			208	3	X	
E20	2	Rack, Bus Pan							
F15.1	1	Heated Holding Unit, Wall Mount		3.9		208	1	X	
		G - SHELVING							
G10.42	1	Shelving, 4Tier, 24" Wide, 42" Long							
		J - FRONT SERVICE COUNTER							
J10	1	Front Service Counter							
J20	2	Cash Controller							
J31	1	Suspended Condiment Unit							
J40	1	Refrigerator, Undercounter	4.9		1/6	120	1		X
J51	2	Cup Dispenser Bracket, 2 San Jamar 2410C Dispensers each							
K20	1	Water Filter, Equipment							
K40	1	CO2 Tank, Bulk							
K42	1	Bag-N-Box Rack w/ 2 Carbonators on Shelves	7.2		1/3	115	1		X
K72	3	Tea Dispenser, Urn, Solid Lid							
		L - DINING							
M30	1	Safe	5.0	0.6		115	1	X	
N10	3	Hand Sink, w/ Hand Free Lever							
N60	1	Flour Bin							
Q11	1	Menu board, 3 Panels				115	1	(3)X	
Q12	1	Pre-Sell Menuboard, Digital 1 Panels				115	1	(1)X	
Q21	1	Remote Speaker Tower, Drive-Thru				115	1		X
Q23	1	Clearance Post, Drive Thru							
Q24	1	Order Confirmation Board	16.0			115	1	X	
CO		Convenience Outlet				115	1		X

NOTES:

1. FOR DIRECT CONNECTION EQUIPMENT A LOCAL DISCONNECTING MEANS SHALL BE PROVIDED IN ACCORDANCE WITH NEC & LOCAL CODE REQUIREMENTS.

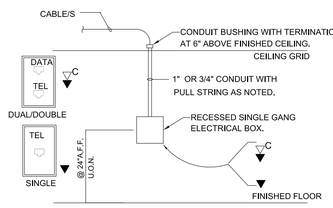

2 E2 TYP COMM. STUB UP DETAIL

NTS

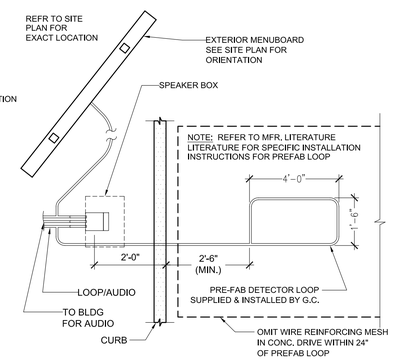

3 E2 DRIVE-THRU LOOP DETECTOR

NTS

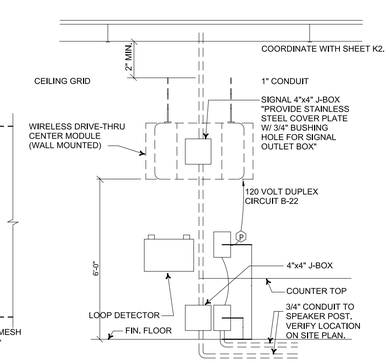

4 E2 DRIVE-THRU AUDIO / TIMERS

NTS

POPEYES
400 PERIMETER CENTER TERRACE
SUITE 1000
ATLANTA, GA 30346
404-459-4450

THESE DRAWINGS ARE THE PROPERTY OF POPEYES / AFC ENTERPRISES, INC. AND SHALL NOT BE USED OR REPRODUCED WITHOUT THE EXPRESS WRITTEN PERMISSION FROM THE OWNER.

MRP DESIGN GROUP
3450 Acworth Due West Road
Building 100, Suite 120
Kennesaw, Georgia 30144
P. 770-917-9172
F. 770-917-9470
www.mrpdesign.com

ARCHITECT OF RECORD:
THOMAS E. MORGAN, JR.
ARCHITECT
423 FISCHER TRAIL
ELLIJAY, GEORGIA 30540

NOT RELEASED FOR CONSTRUCTION

ISSUES/REVISIONS	
DATE	DESCRIPTION
2/1/18	CHECK SET

POPEYES
525 441 HISTORIC HWY.
CORNELIA , GA 30531
LOUISIANA KITCHEN LK-PLUS DESIGN STANDARDS
60 SEATS / DUAL-LINE PRODUCTION JOB:17067

REVISIONS:

DATE: 9/23/13

E2

CHECKED: TM KR